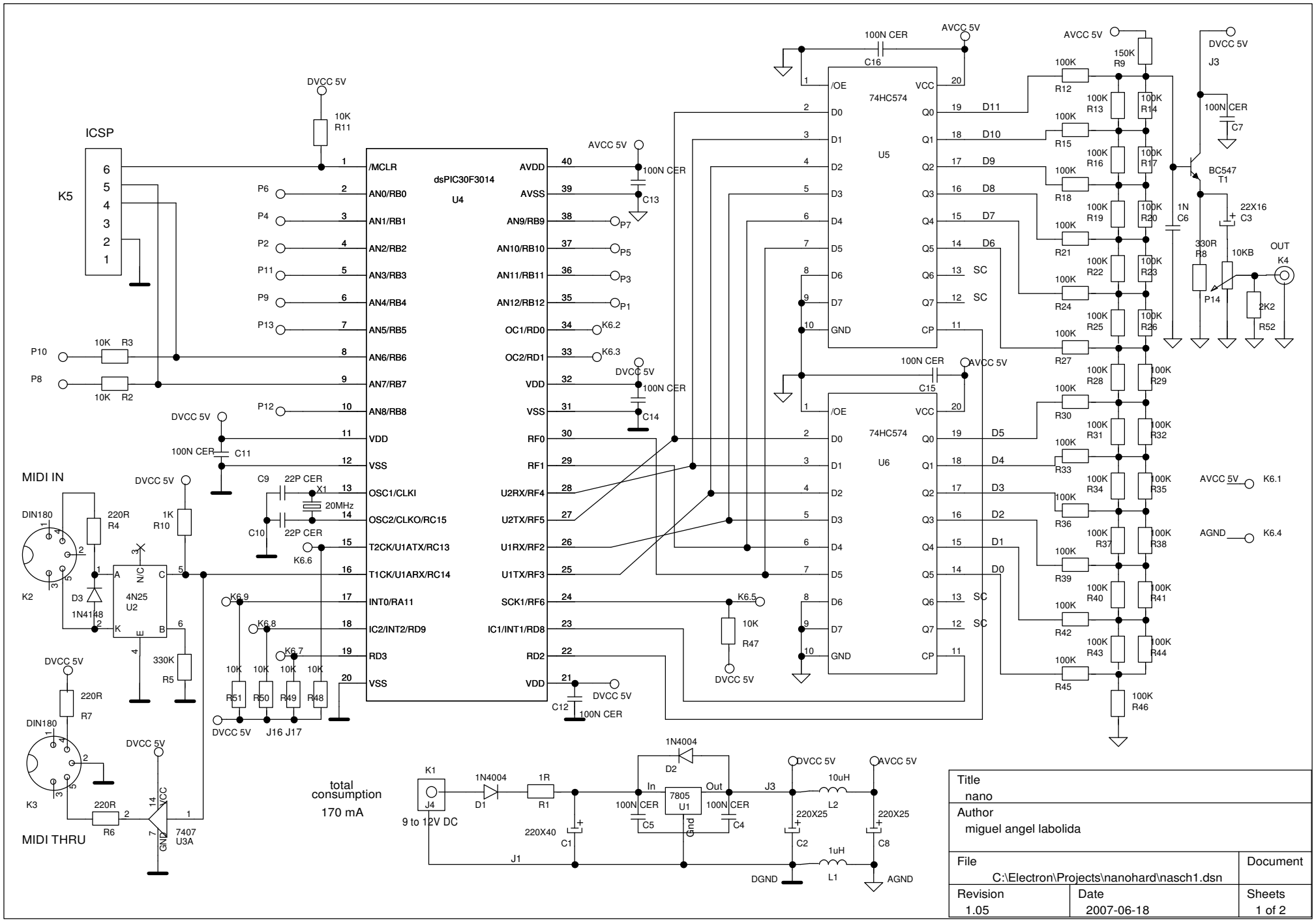

Title		
nano		
Author		
miguel angel labolida		
File		Document
C:\Electron\Projects\nanohard\nasch1.dsn		
Revision	Date	Sheets
1.05	2007-06-18	1 of 2