nonlinearcircuits

NULL-A_2 Build & BOM

Null-A_2 is an all-in-one analogue synth packed into 42HP.

It features:

2 VCOs	3 VCAs	Sequencer
1 state variable VCF	2 LFOs	Clock Divider
1 ladder VCF	Mixer	Sample & Hold (S&H)
1 VC Delay	Headphone amp	Sloth chaos generator

It does **not** feature MIDI, micro-processors or any software.

There are several presets that run between the switches of the jacks. If you insert a patch-cable into either jack the preset is disconnected.

a) VCO1 pulse out > state variable VCF input
b) VCO2 pulse out > ladder VCF input
c) state variable VCF LP output > VCA1 input
d) ladder VCF output > VCA2 input
e) VCA1 output > mixer
f) VCA2 output > mixer
g) Mixer output > headphone amp
h) ADSR output > VCA1 CV input
i) Clock divider /8 output > ADSR gate input
j) LFO 1 square output > S&H clock input
k) LFO2 triangle output & Sloth chaos output & sequencer CV output > S&H sample input
l) LFO2 square output > Clock divider input
m) LFO2 square output > Sequencer clock input

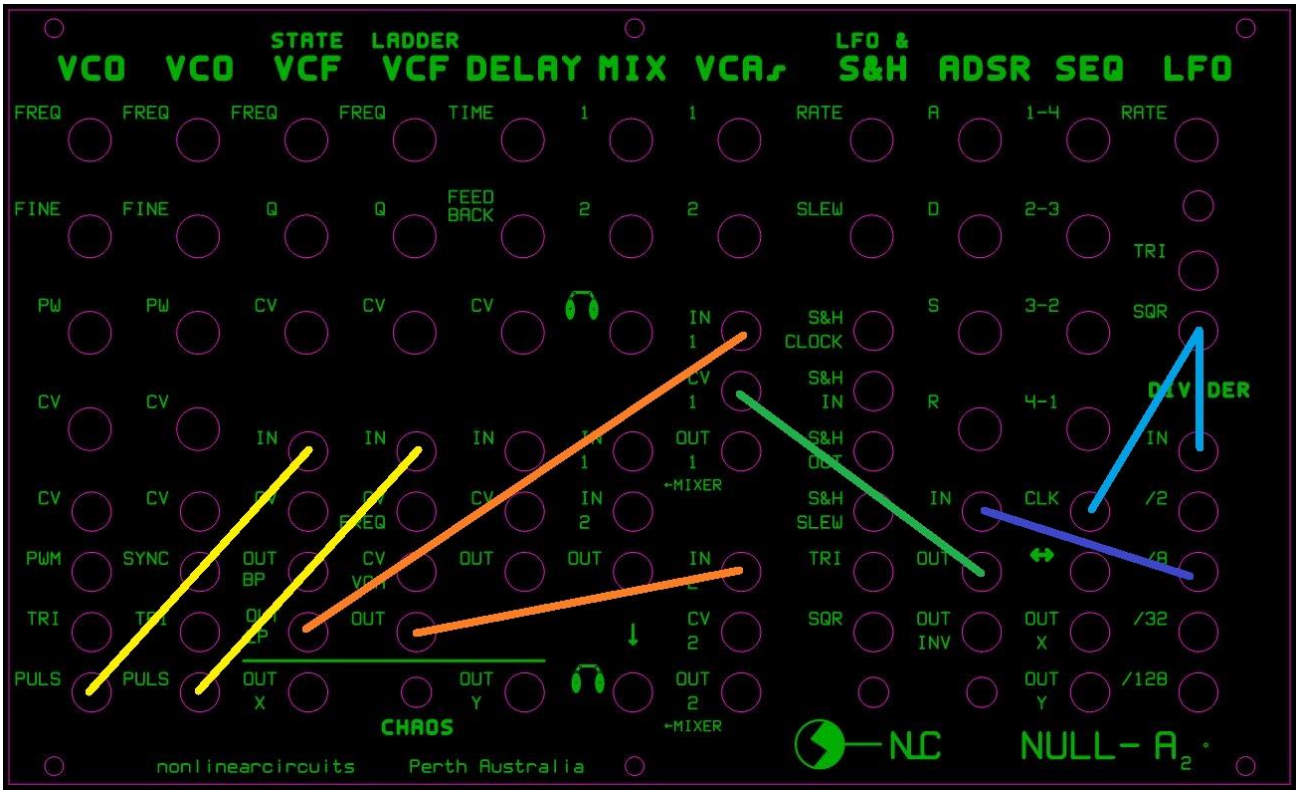

Preset patches a, b, c, d, h, i, l, m from the above list

Most of these are simply to save a few patch-cables.

The interesting one is the signals from the Sequencer, Sloth chaos and Tri from LFO2 are mixed and fed to the S&H sample input. This means it is continually generating stepped and smooth CVs (for there is a Slew pot) that are different but related to everything else that is going on.

The Clock Divider gives divisions of /2, /8, /32 and /128.

The Sequencer has 4 stages but the direction control can be used to make it count forwards and backwards enabling more complex sequences. In normal operation, the 'x' output gives the CV generated by the stages 1 thru to 4, meanwhile the 'y' output will give a CV signal generated by stages 4 thru to 1.

The VC Delay can be used to generate reverb type sounds but can also be pushed into making all sorts of unexpected zipper noises and effects when the Time and Feedback pots are turn high.

The third VCA is built into the input of the Ladder VCF. If nothing is patched into the 'CV VCA' input, the VCA is always on.

The Sloth Chaos is a very slow CV generator, it can be used to liven up a patch and create slowly evolving sounds. It cannot be controlled, it does what it wants.

Components:

- All passives are 0805; <u>make sure the capacitors are rated for at least 25V</u>, preferably 50V. The 10uF capacitors will only be available with a 25V rating, which is fine.
- C46-C74 are all listed as 10uF, these are for decoupling. You can replace some of them close to ICs with 100nF if you wish, but the ones near the power connector and close to the bottom edge of the PCB should all remain 10uF.
- The LFOs and Sloth have been designed to work with 2 pin bipolar LEDs. You can just install normal LEDs instead, if you want to be boring. The ADSR uses a regular LED.
- RL in the value list means you need to choose a resistor to suit the brightness of your LED. For blue/red 2 pin bipolar LEDs I used 5k1.
- The ICs are all SOIC. You can get the PT2399 and 8 pin 78L05 from Tayda for a few cents.
- R8 and R30 can be 1k tempco thru-hole resistors **OR** regular 1k 0805 if you don't care all that much about VCO tuning stability. **Do not install both types.** If you do use tempco thru-holes, install them so the resistor body is resting on the 2 transistor pairs (Q1 & Q2, Q3 & Q4).
- Part numbers are for www.taydaelectronics.com, just to give examples.
- There is no R207, C73, Q25 on vers 2 PCBs, so do not look for them.
- The diode numbering got a bit messed up, so ignore it. It doesn't matter, there are 16 LL4148 diodes and 2 S1JL power diodes, these are located right next to the power connector, marked with a dot to indicate the cathode and are for reverse voltage protection.
- R195 (1M) can be used to reduce the maximum attack time in the ADSR. I leave it out on my builds.
- Any components with "*" next to them means they can be tweaked, for now ignore the * and use the value given.
- When soldering R148, drag the solder across the connect it to the via just below

PART NUMBER	VALUE	COMMENTS
C1	2n2	
C2	2n2	
C3	1nF	
C4	1nF	
C5	100p	
C6	100p	
C7	220nF	
C8	100n	
C9	100n	
C10	100n	
C11	100n	
C12	470p	
C13	10u	
C14	10u	
C15	10n	
C16	100n	
C17	1u	
C18	10n	
C19	10u	
C20	100n	
C21	10u	
C22	100n	
C23	100n	
C24	100n	
C25	100n	
C26	1n	
C27	10n	
C28	1n	
C29	10u	
C30	10u	
C31	10u	
C32	1u	
C33	1nF	
C34	10n	
C35	1u	
C36	1u	
C37	1u	
C38	1u	
C39	1u	
C40	1u	
C41	10u	
C42	10u	
C43	10u	
C44	10u	
C45	10u	
C46	10u	
C47	10u	
C48	10u	
C49	10u	
C50	10u	

C51	10u	
C52	10u	
C53	10u	
C54	10u	
C55	10u	
C56	10u	
C57	10u	
C58	10u	
C59	10u	
C60	10u	
C61	10u	
C62	10u	
C63	10u	
C64	10u	
C65	10u	
C66	10u	
C67	10u	
C68	10u	
C69	10u	
C70	10u	
C71	10u	
C72	10u	
C73	-	not on vers 2
C74	10u	
R1	91k	
R2	100k	
R3	100k	
R4	2M2	
R5	24k	
R6	10k	
R7	56k	
R8	1kT	or thru-hole
R9	15k	
R10	220R	
R11	100k	
R12	100k	
R13	1k	
R14	10k	
R15	39k	
R16	10k	
R17	100k	
R18	10K	
R19	10K	
R20	100k	
R21	100k	
R22	100k	
R23	91k	
R24	100k	
R25	100k	
R26	2M2	
R27	24k	

R28	100k	
R29	56k	
R30	1kT	or thru-hole
R31	10k	
R32	15k	
R33	220R	
R34	100k	
R35	47k	
R36	1k	
R37	10k	
R38	39k	
R39	10k	
R40	100k	
R41	180k	
R42	180k	
R43	100k	
R44	10k	
R45	10k	
R46	100k	
R47	150k	
R48	100k	
R49	100k	
R50	100k	
R51	100k	
R52	470k	
R53	2k7	
R54	200k	
R55	2k2	
R56	33k	
R57	27k	
R58	2k2	
R59	33k	
R60	56k	
R61	56k	
R62	100k	
R63	100R	
R64	100R	
R65	62k	
R66	100k	
R67	15k	
R68	100R	
R69	100R	
R70	100k	
R71	150k	
R72	1k	
R73	100k	
R74	8k2	
R75	1k	
R76	470R	
R77	12k	
R78	62k	
R79	2K7	
R80	1K	
R81	1K	
R82	1K	

R83	1K	
R84	470K	
R85	470k	
R86	15k	
R87	330R	
R88	2K7	
R89	1K	
R90	1K	
R91	12k	
R92	100k	
R93	47k	
R94	47k	
R95	1K	
R96	12k	
R97	47k	
R98	30k	
R99	47k	
R100	470R	
R101	470R	
R102	220k	
R103	68k	
R104	10K	
R105	10K	
R106	100k	
R107	330k	
R108	1k	
R109	100k	
R110	47k	
R111	47k*	
R112	10k*	
R113	22k	
R114	220k	
R115	2K2	
R116	1K	
R117	10k	
R118	10k	
R119	10k	
R120	15k	
R121	10k	
R122	15k	
R123	2k2	
R124	47k	
R125	220k	
R126	1k	
R127	100k	
R128	100k	
R129	100k	
R130	100k	
R131	100k	
R132	100k	
R133	1k	
R134	100k	
R135	1k	
R136	1k	
R137	1k	

R138	1k	
R139	100k	
R140	12k	
R141	47k	
R142	30k	
R143	47k	
R144	470R	
R145	470R	
R146	220k	
R147	1k	
R148	12k	
R149	47k	
R150	30k	
R151	47k	
R152	470R	
R153	470R	
R154	220k	
R155	1k	
R156	470k	
R157	100k	
R158	100k	
R159	100k	
R160	2M2	
R161	1k	
R162	1k	
R163	100k	
R164	10k	
R165	1k	
R166	100k	
R167	1k	
R168	100k	
R169	330k	
R170	4M7	
R171	220R	
R172	100k	
R173	1k	
R174	2K2	
R175	4K7	
R176	RL	LFO LED
R177	1k	
R178	33k	
R179	22k	
R180	10k	
R181	22k	
R182	10K	
R183	22K	
R184	150K	
R185	56k	
R186	560K	
R187	47k	
R188	15K	
R189	47k	
R190	56k	
R191	22k	
R192	100k	

R193	47K	
R194	33k	
R195	1M	optional, see notes
R196	1k	
R197	100k	
R198	100k	
R199	RL	ADSR LED
R200	1k	
R201	47k	
R202	330R	
R203	100k	
R204	10k	
R205	330R	
R206	47k	
R207	-	not on vers 2
R208	4M7	
R209	330k	
R210	100k	
R211	100k	
R212	220R	
R213	2k2	
R214	4k7	
R215	1k	
R216	100k	
R217	RL	LFO LED
R218	2k2	
R219	2k2	
R220	2k2	
R221	2k2	
R222	2k2	
R223	2k2	
R224	2k2	
R225	2k2	
R226	10k	
R227	100k	
R228	10k	
R229	100k	
R230	10k	
R231	100k	
R232	100k	
R233	100k	
R234	100k	
R235	100k	
R236	100k	
R237	100k	
R238	100k	
R239	150k	
R240	100k	
R241	1k	
R242	100k	
R243	150k	
R244	100k	
R245	1k	
R246	10k	

R247	100k	
R248	100k	
R249	10k	
R250	1M	
R251	1M	
R252	1k	
R253	1M	
R254	4k7	
R255	4k7	
R256	100k	
R257	100k	
R258	6M8	
R259	4M7	
R260	10M	
R261	RL	Sloth LED
R262	100k	
TL072	U8, U10, U12, U15, U16, U22, U24,	
TL074	U1, U3, U5, U13, U14, U17, U18, U23, U25	
LM13700	U2, U4, U6, U11	
PT2399	U7	
4024	U19	
4029	U21	
4052	U20	
LM78L05ACMX	U9	8 PIN SOIC Tayda: A-629
Trimpot 100k multiturn	TR1, TR3	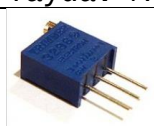
Trimpot 20k multiturn	TR2, TR4	
Trimpot 100k	TR6, TR7, TR9	
Trimpot 50k	TR5	

Trimpot 1k	TR8	
BCM847	Q13, Q17	SOT23-6 AKA SOT-457 Mouser Part No: 771-BCM847DS115
BC847	Q1, Q3, Q5, Q7, Q8, Q10, Q14, Q15, Q16, Q18, Q20, Q21, Q22, Q23, Q26, Q30, Q32, Q33, Q34, Q37, Q38, Q39, Q40, Q41, Q42, Q43	SOT23 There is no Q25 on vers 2.
BC857	Q2, Q4, Q6, Q9, Q19, Q24, Q27, Q28, Q31, Q35, Q36,	SOT23
S1JL power diode	D6, D7	The ones with the dots, near the power connector
LL4148	all other diodes	Diode numbering is a bit messed up, so ignore
J108 or J109 or J112 (MMBFJ108) or MMBF5459 or MMBF5486	Q11, Q12, Q29	SOT-23

COMPONENT	QUANTITY	COMMENTS
2 pin bipolar LED	3	5mm
LED	1	5mm
100k pot	29	
1MA pot	4	
MONO jacks	50	 Kobiconn type
STEREO jack	1	Kobiconn type
Eurocrack power connector	1	
single vactrol	1	anything okay, even DIY
10 Pin 2.54mm Single Row Female Pin Header	13	Tayda: A-1306
40 Pin 2.54mm Single Row Pin Header Strip	at least 4	cut into 10 pin lengths Tayda: A-197

Passives, transistors & diodes BOM…..*GET SPARES!!!!!!*

470P	1
100n	10
100p	2
10n	4
10u	41
1n	5
1u	8
220n	1
2n2	2
100k	66
100R	4
10k	26
10M	1
12k	5
150k	5
15k	7
180k	2
1k	33
1k Tempco	2
1M	4
200k	1
220k	5
220R	4
22k	5
24k	2
27k	1
2k2	14

2k7	3
2M2	3
30k	3
330k	3
330R	3
33k	4
39k	2
470k	4
470R	7
47k	17
4k7	4
4M7	3
560k	1
56k	6
62k	2
68k	1
6M8	1
8k2	1
91k	2
RL	4
BC847	26
BC857	11
LL4148	16
J108,J109,J112 or similar	3
S1JL	2

Small mod required for R148:

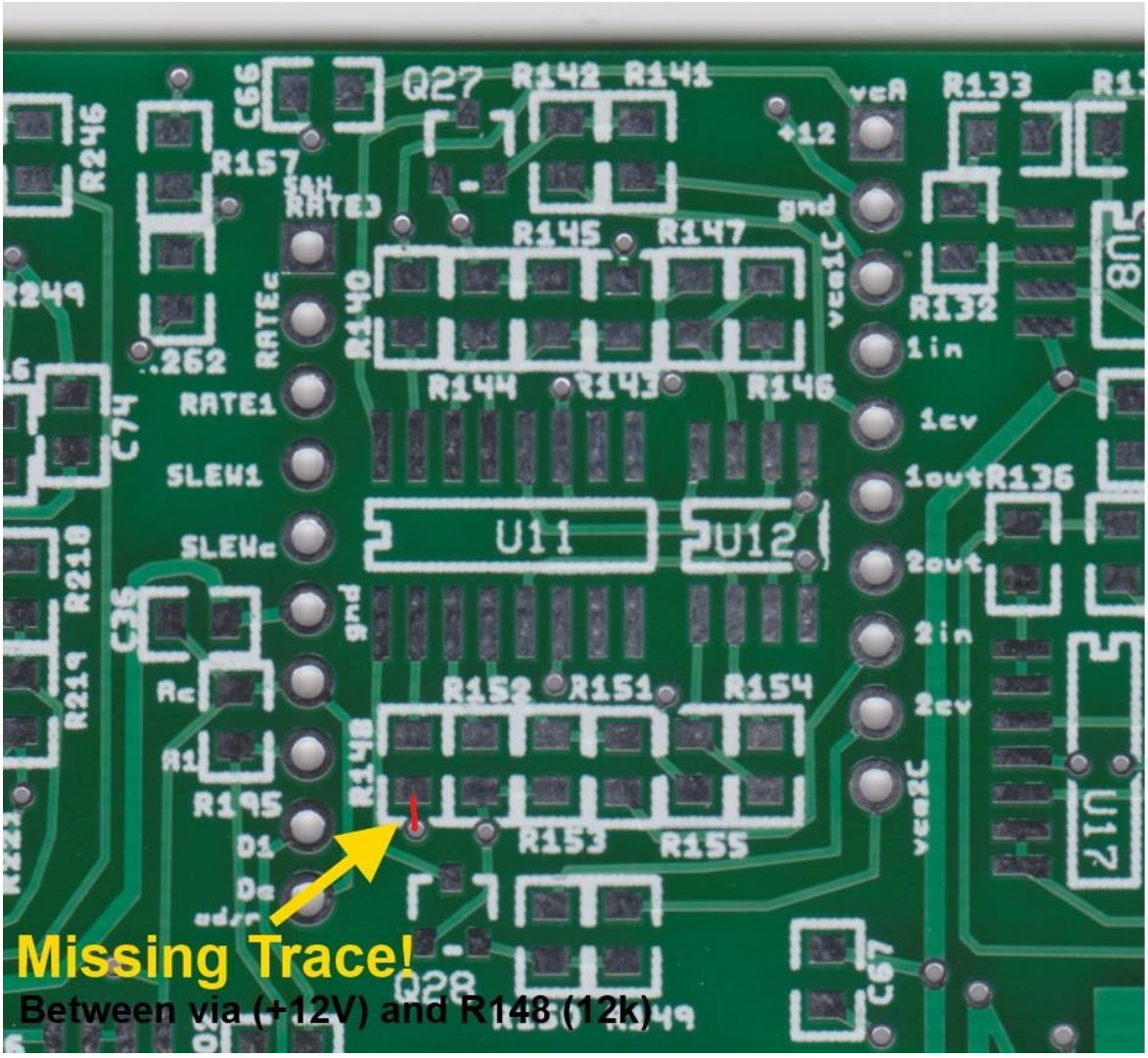

when soldering R148, drag solder across so it also connects to the via just south of it.

Set-Up

VCOs: The 100k trimpots on the VCOs are used to set up the panel pots so they have minimal dead zones at the start and ends of their travel.

The 20k trimpots are used to dial in 1V/oct tuning; you should be able to get 3 octaves of decent tracking from these VCOs. I use a guitar tuner and get the VCO to some note, then stick in 1V to the CV input (make sure the CV pot is turned to max) and adjust the 20 trimpot until the tuner shows the same note 1 octave up. Remove the 1V source and your VCO will not return to the original frequency, tune the 20k trimpot again to a note, put in 1V…..and so on. It takes a few goes until you dial it in to the correct tuning.

State VCF: The balance trimpot (TR5) can usually be left at its mid-point. If you notice one of the outputs is much louder than the other, adjust this trimpot to get the outputs balanced.

TR6, the Freq offset trimpot is used to ensure the Freq pot is functional across its range, same idea as the 100k trimpots on the VCOs.

Ladder VCF: TR9 Ladder VCA trimpot at the top of the PCB is used to set up the VCA. Plug in a signal and listen to the output. Now plug a lead into the VCA CV input with the other end hanging free. Use this trimpot to turn off any signal you may still hear. Set it to the point just where the signal can no longer be heard. Remove the lead plugged into the VCA CV input; you should now hear the signal again.

TR7 Freq this sets the useful operating region of the CV inputs and Freq cutoff. Adjust it so you get good sounds coming out of the VCF when tweaking the Freq pot, by good sounds I mean runny liquid acid.

TR8 Q sets the range for the Q or resonance, set it so you get the filter screaming when the Q pot is turned up near max.

Board close-ups

Top right

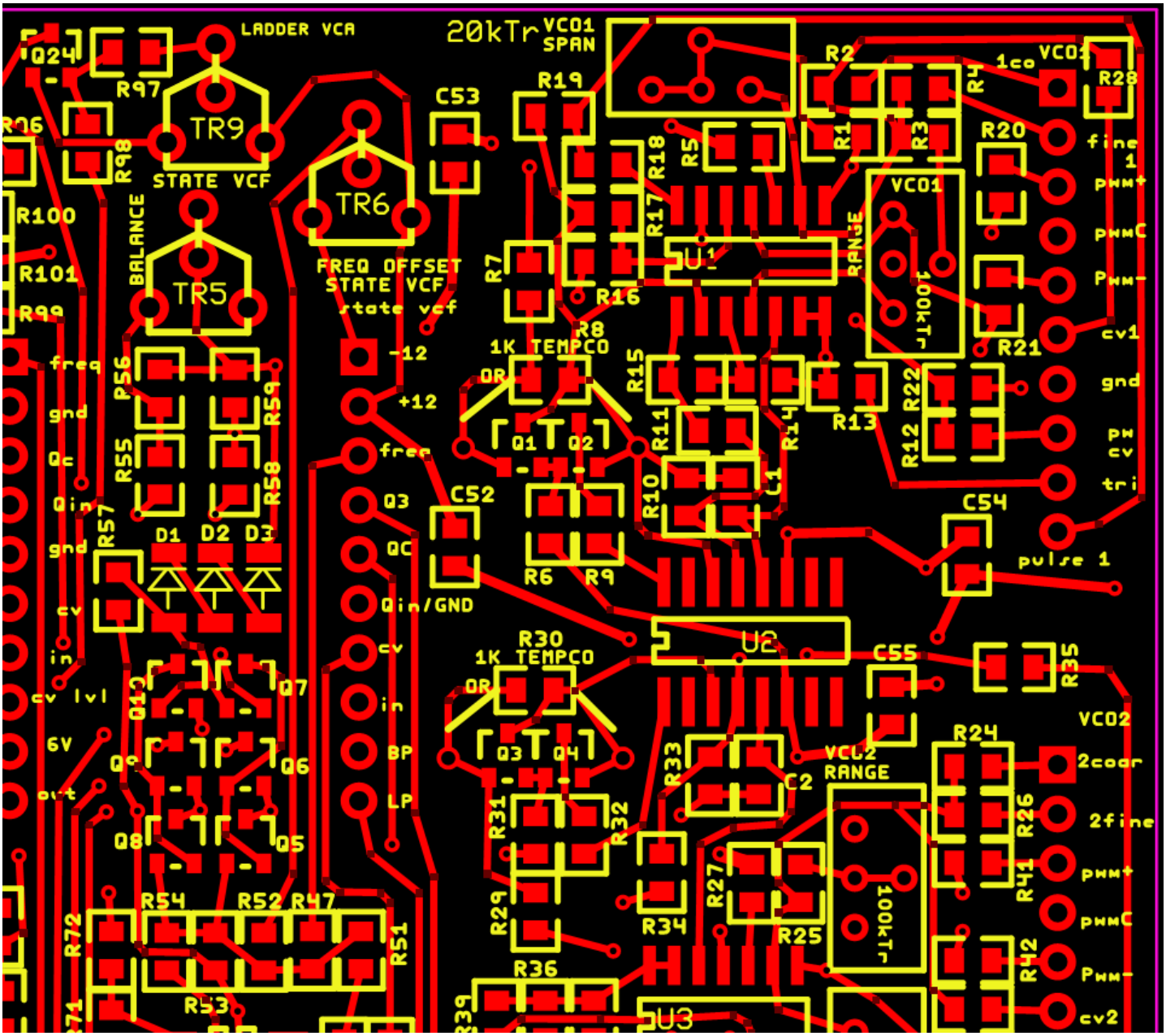

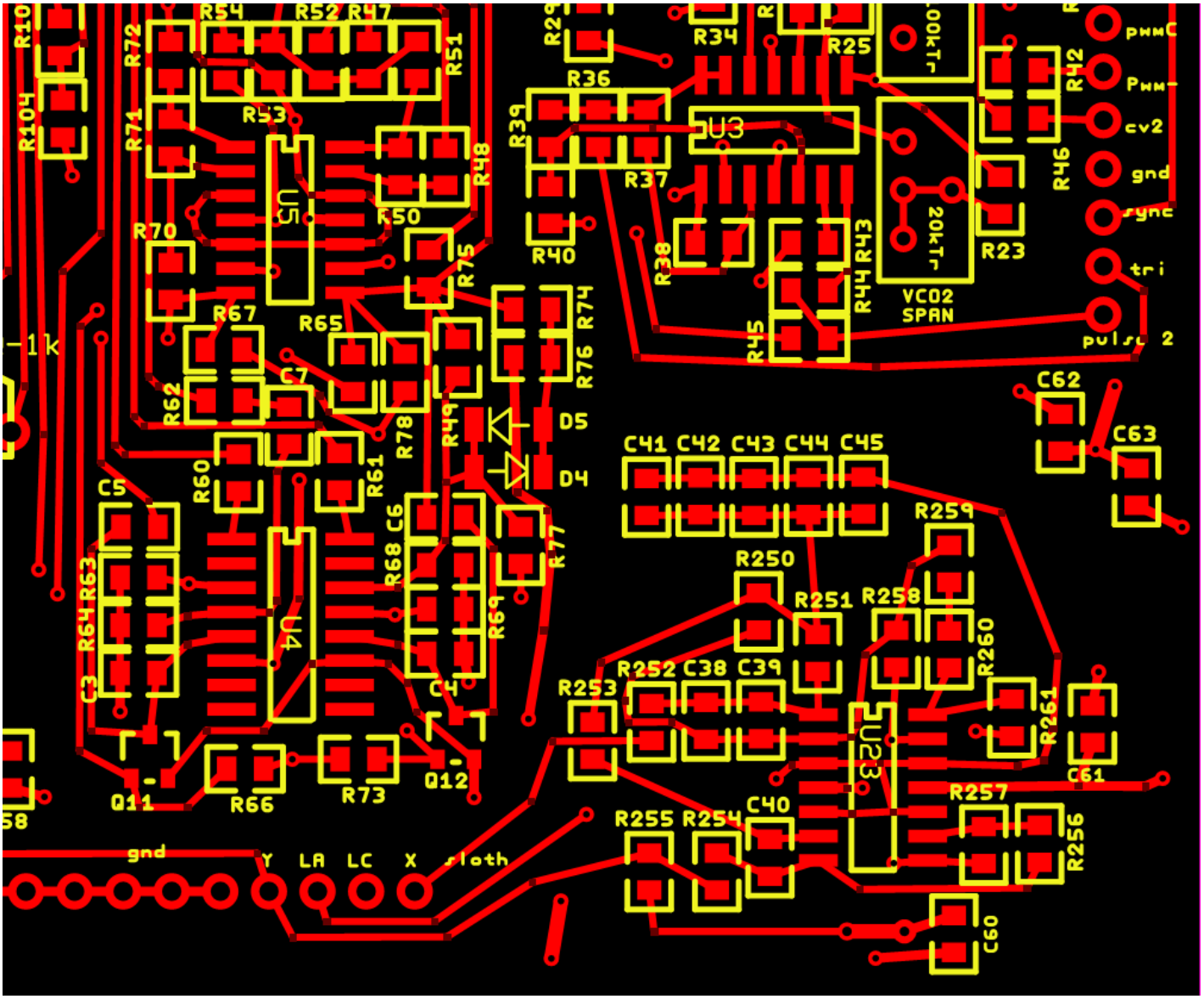

Bottom right

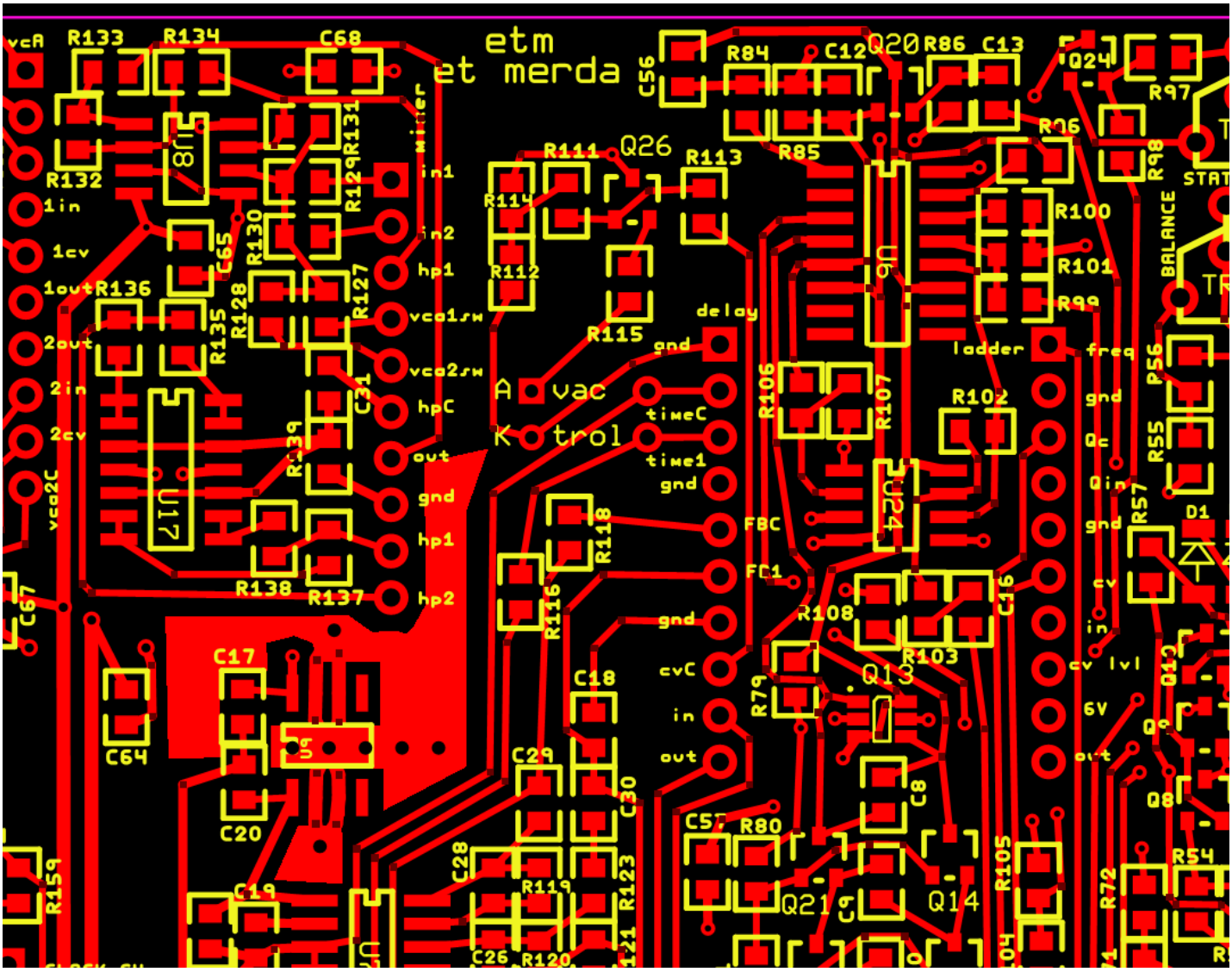
etm
et merda
A vac
K trol
vcA
R133
R134
C68
R132
1in
1cv
1out
2out
2in
2cv
vco2C
R136
C65
R135
R128
R130
R129
R131
R127
C31
R139
R138
R137
C67
C64
C17
C20
C19
R159
mixer
in1
in2
hp1
vco1sw
vco2sw
hpC
out
gnd
hp1
hp2
R111
Q26
R113
R114
R112
R115
R118
R116
C18
C29
C30
C28
R119
R123
C26
R120
delay
gnd
timeC
time1
gnd
FBC
FC1
gnd
cvC
in
out
R84
C12
Q20
R86
C13
C56
R85
R106
R107
R108
R103
Q13
R79
C8
C57
R80
Q21
C9
Q14
R105
R104
R72
R54
R100
R101
R99
R102
ladder
freq
gnd
Qc
Qin
gnd
cv
in
cv lvl
6V
out
C16
R97
R96
R98
STAT
BALANCE
R56
R55
R57
D1
D12
Q9
Q8

Top middle

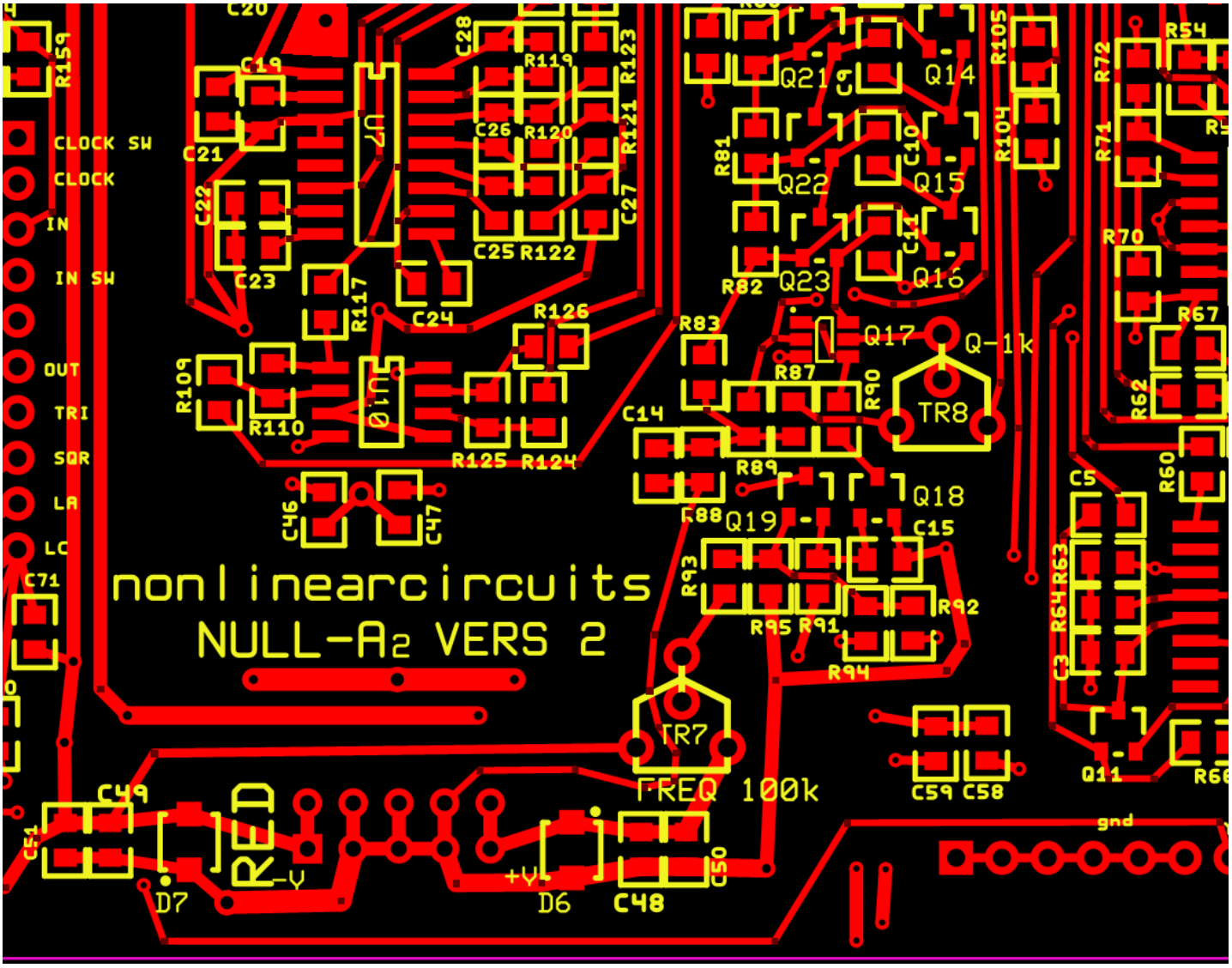

bottom middle

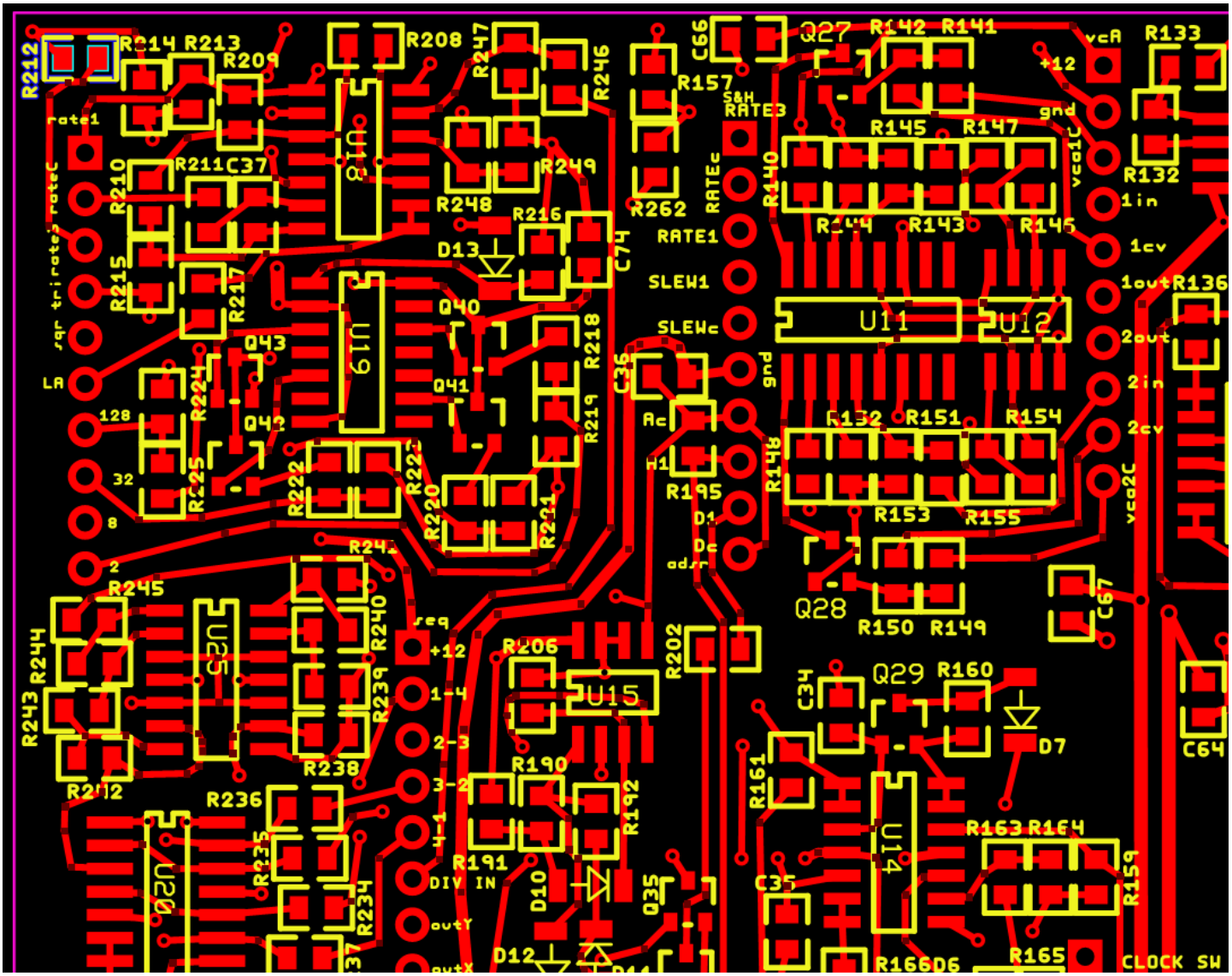
R212
R214 R213
R209
R208
R247
R246
C66
Q27
R142 R141
vcA
R133
+12
R157
S&H
RATE3
gnd
R145 R147
R140
vca1C
R132
R211 C37
R210
U18
R248
R249
R262
RATEc
R144 R143 R146
1in
R216
D13
C74
RATE1
1cv
R215
R217
SLEW1
1out
R136
Q40
U11
U12
SLEWc
2out
Q43
R218
C36
gnd
LA
Q41
2in
128
R224
Q42
R219
Ac
R132 R151 R154
2cv
32
R225
R222
R223
R220
R221
H1
R195
R148
vca2C
8
D1
R153 R155
R241
Dc
adsr
2
R245
Q28
C67
R244
U25
R240
seq
R150 R149
+12
R206
R202
C34
Q29
R160
R243
R239
1-4
U15
D7
C64
2-3
R190
R242
R238
3-2
R161
R236
R192
4-1
U14
R163 R164
R235
R191
DIV IN
D10
Q35
C35
R159
U20
R234
outY
D12
R166 D6
R165
CLOCK SW
outX

Top left

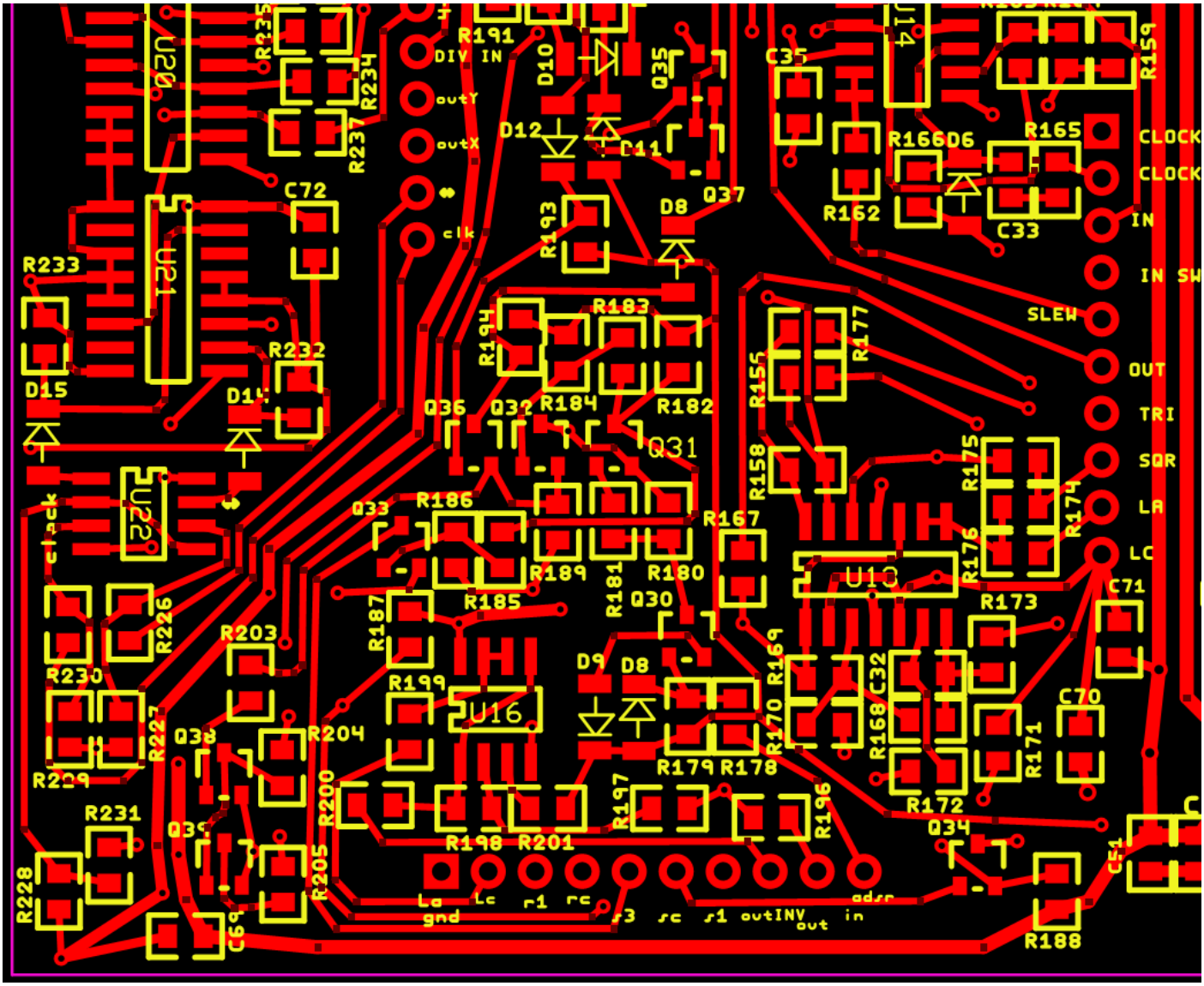
R191
DIV IN
outY
outX
clk
D10
Q35
C34
J14
R159
D12
C11
R166
D6
R165
CLOCK
CLOCK
IN
IN SW
SLEW
OUT
TRI
SQR
LA
LC
C71
C72
Q37
D8
R162
C33
R233
U20
U21
R193
R194
R183
R177
R155
R232
D15
D14
Q36
Q32
R184
R182
Q31
R158
R175
R174
U22
Q33
R186
R167
R176
U18
R189
R181
R180
R185
Q30
R173
R226
R203
R187
R230
R199
D9
D8
R169
C32
C70
R227
Q38
R204
U16
R170
R168
R171
R229
R179
R178
R231
R200
R197
R196
R172
Q34
Q39
R198
R201
R228
R205
C69
C51
R188
La
gnd
Lc
r1
rc
r3
sc
s1
outINV
out
in
adsr

Bottom left

SCHEMATICS

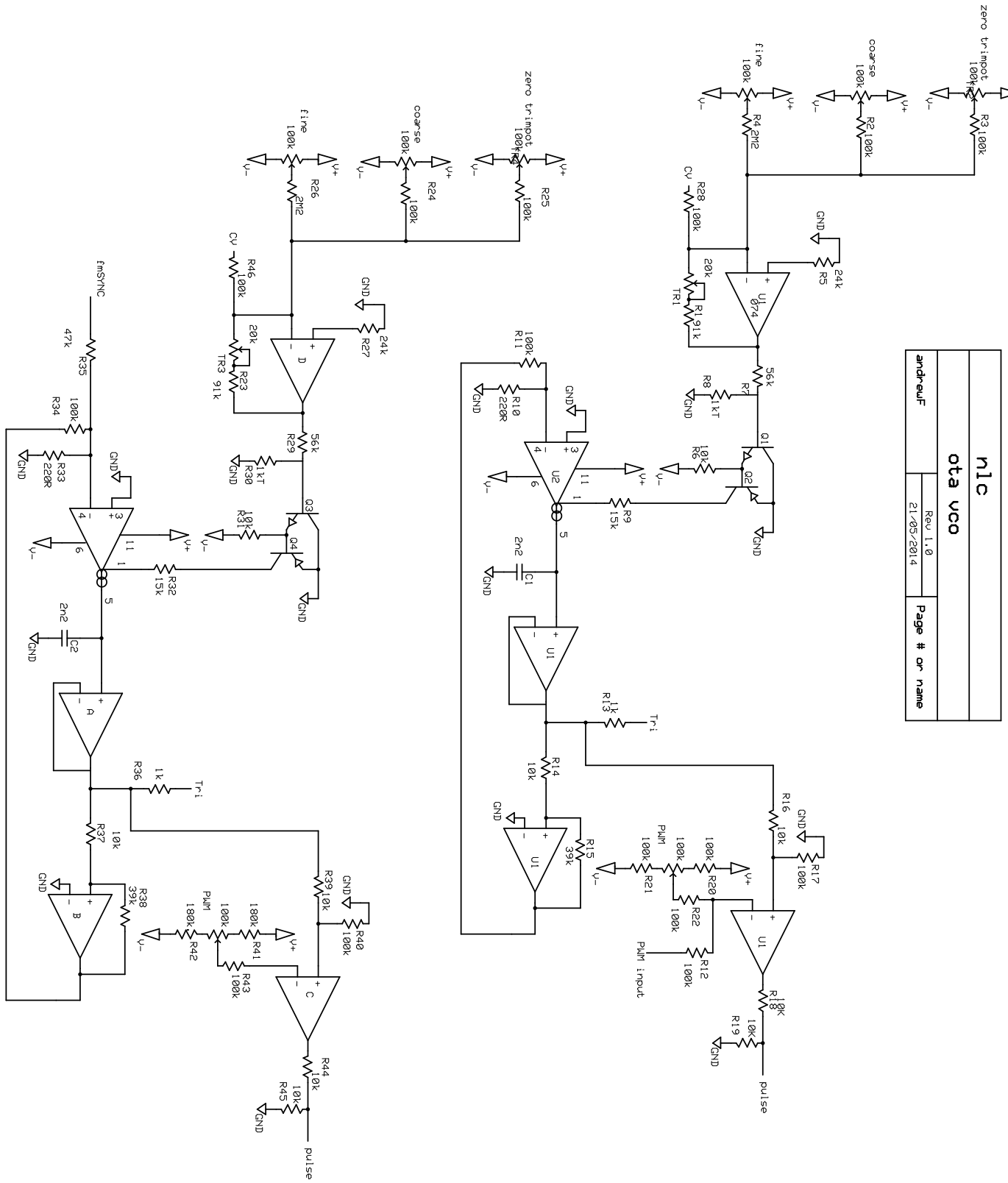
nlc
ota vco
andrewF
Rev 1.0
21/05/2014
Page # or name
zero trimpot
100k
R3 100k
coarse
100k
R2 100k
fine
100k
R4 2M2
R28 100k
CV
20k
TR1
R1 91k
U1 074
R5 24k
GND
56k
R7
R8 1kT
Q1
Q2
R6 10k
R9 15k
U2
R10 220R
R11 100k
C1 2n2
U1
R13 1k
Tri
R14 10k
R15 39k
R16 10k
R17 100k
R18 10k
R19 10k
pulse
R20 100k
R21 100k
R22 100k
R12 100k
PWM
PWM input
R24 100k
R25 100k
R26 2M2
R27 24k
D
R29 56k
R30 1kT
Q3
Q4
R31 10k
R32 15k
R46 100k
R23 20k
TR3 91k
fmSYNC
R35 47k
R34 100k
R33 220R
C2 2n2
A
R36 1k
R37 10k
B
R38 39k
R39 10k
R40 100k
C
R41 180k
R42 180k
R43 100k
R44 10k
R45 10k

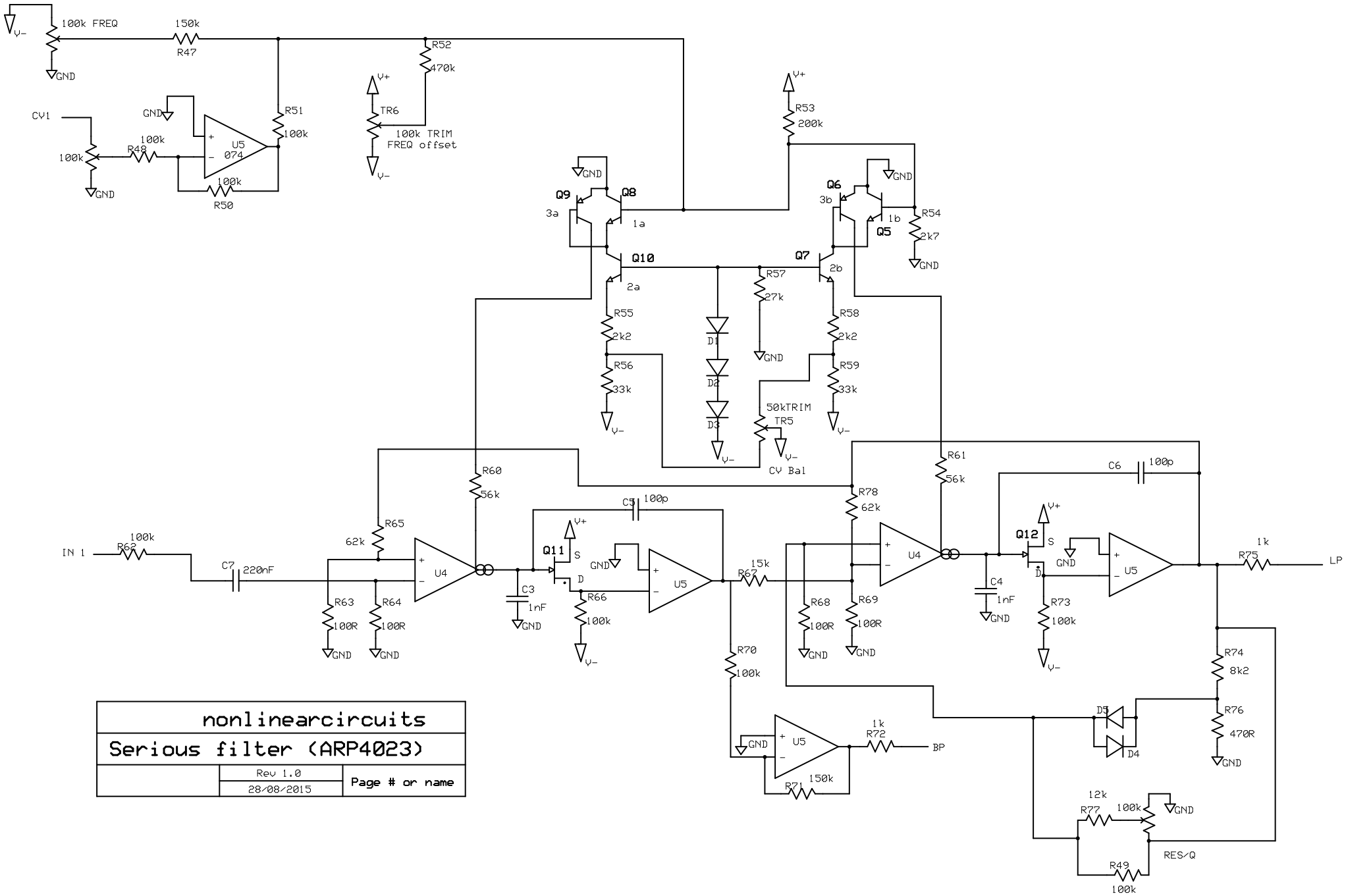

nonlinearcircuits		
Serious filter (ARP4023)		
	Rev 1.0 28/08/2015	Page # or name

NONLINEARCIRCUITS		
LADDER VCF		
Designer's name	Rev 1.0 01-Dec-16	Page # or name

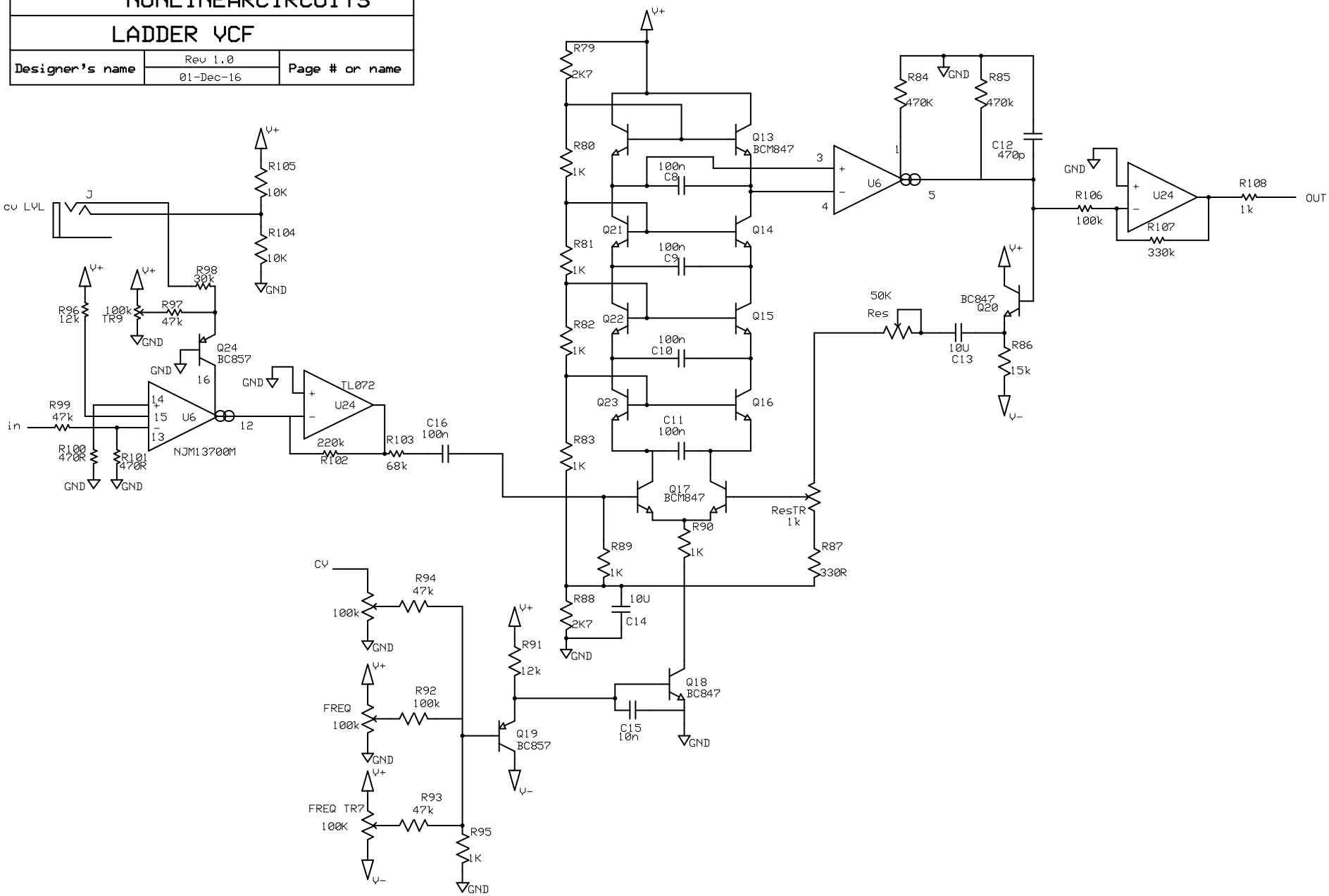

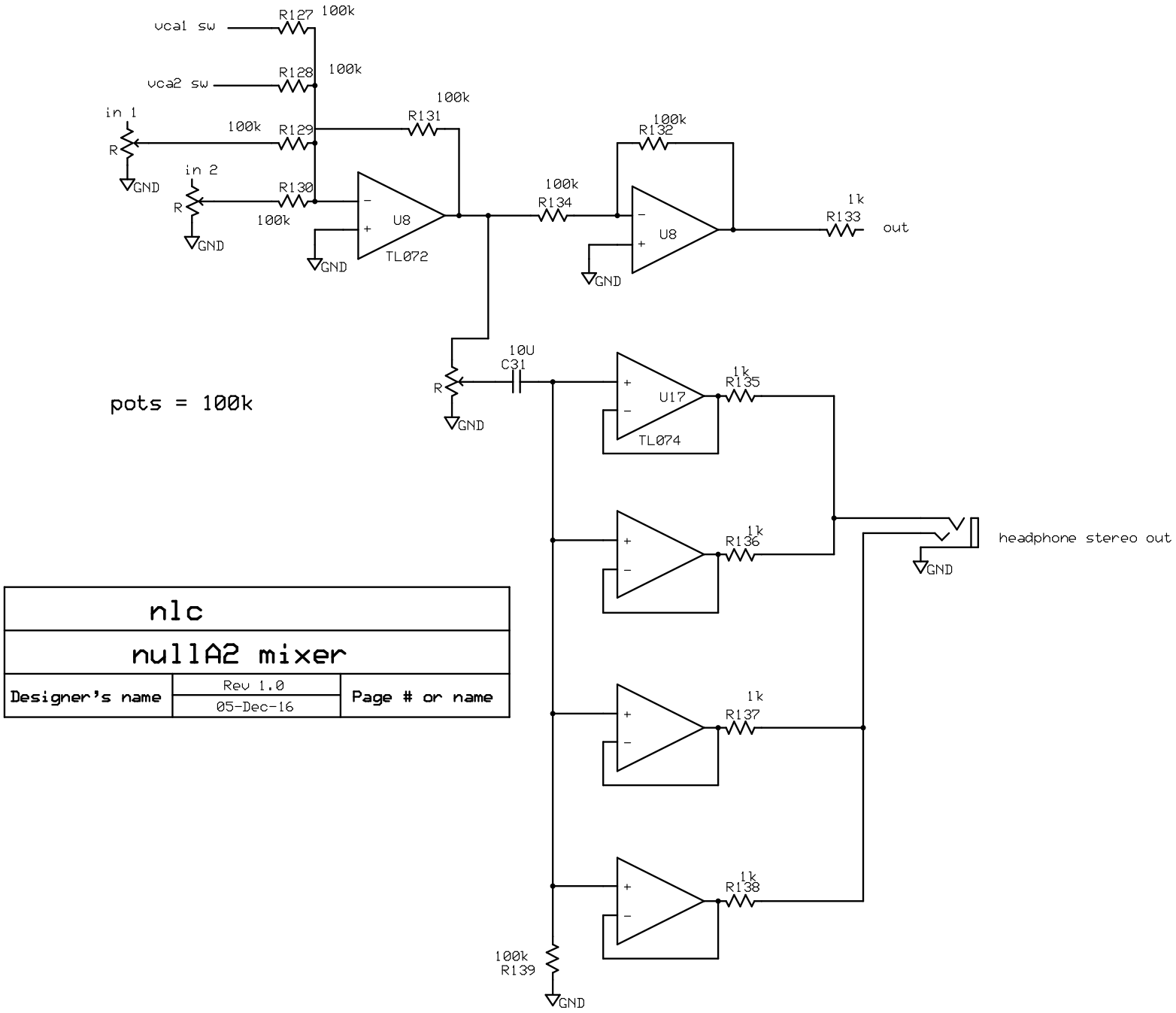

nlc		
nullA2 mixer		
Designer's name	Rev 1.0 05-Dec-16	Page # or name

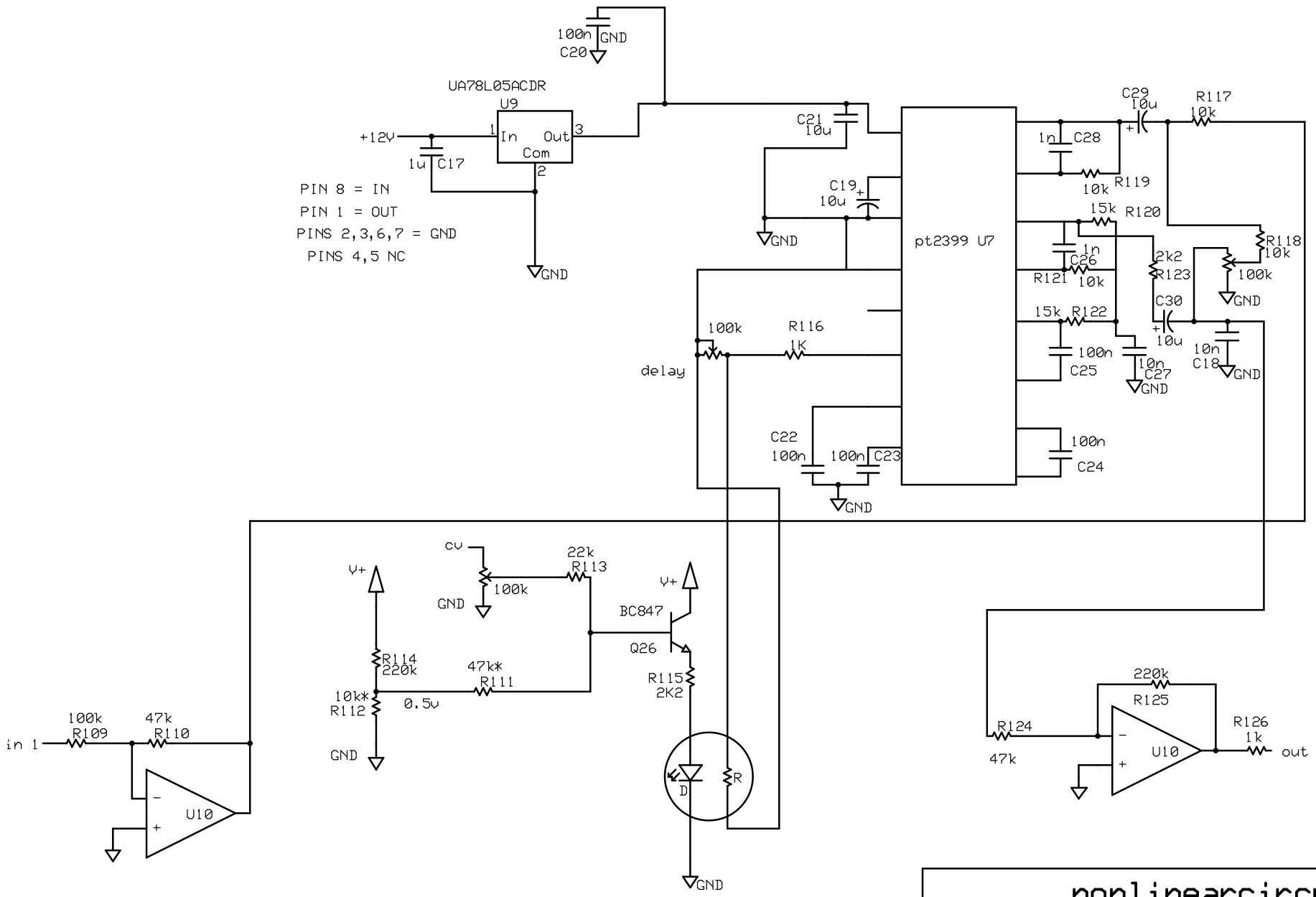

nonlinearcircuits		
delay null A		
andrewF	Rev 1.0 25/09/2014	Page # or name

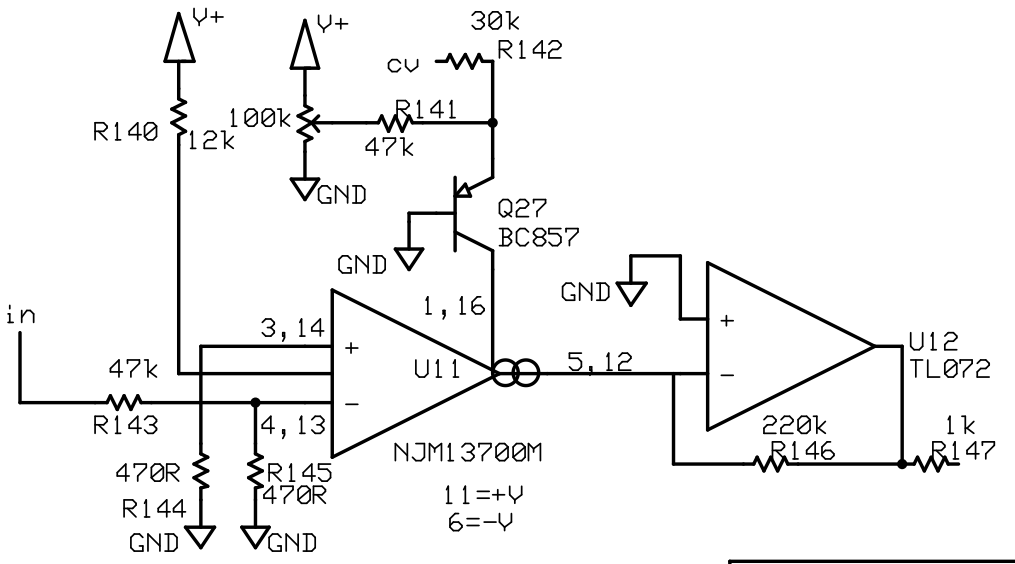

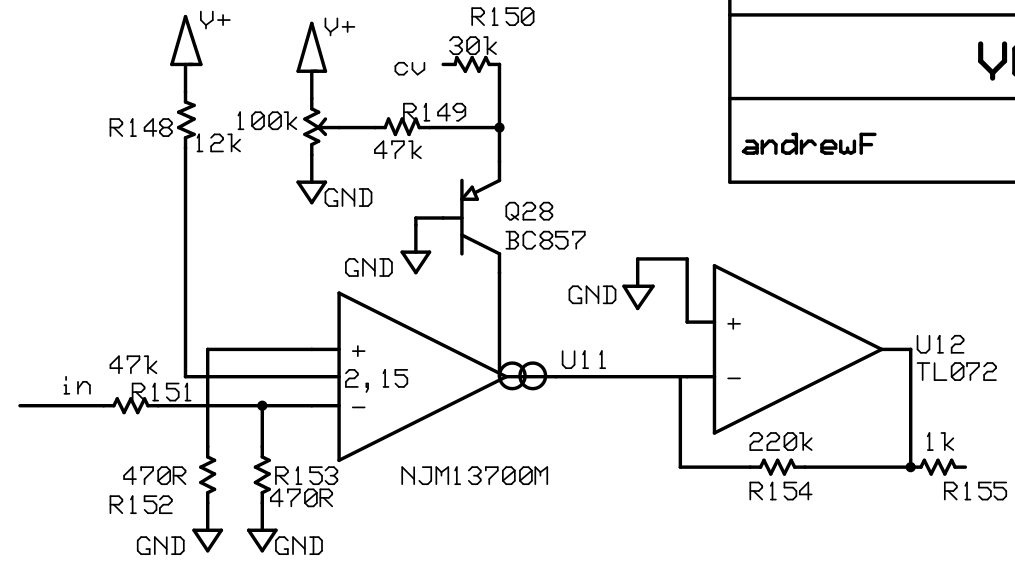

nonlinearcircuits		
YCAs		
andrewF	Rev 1.0 30/11/2014	Page # or name

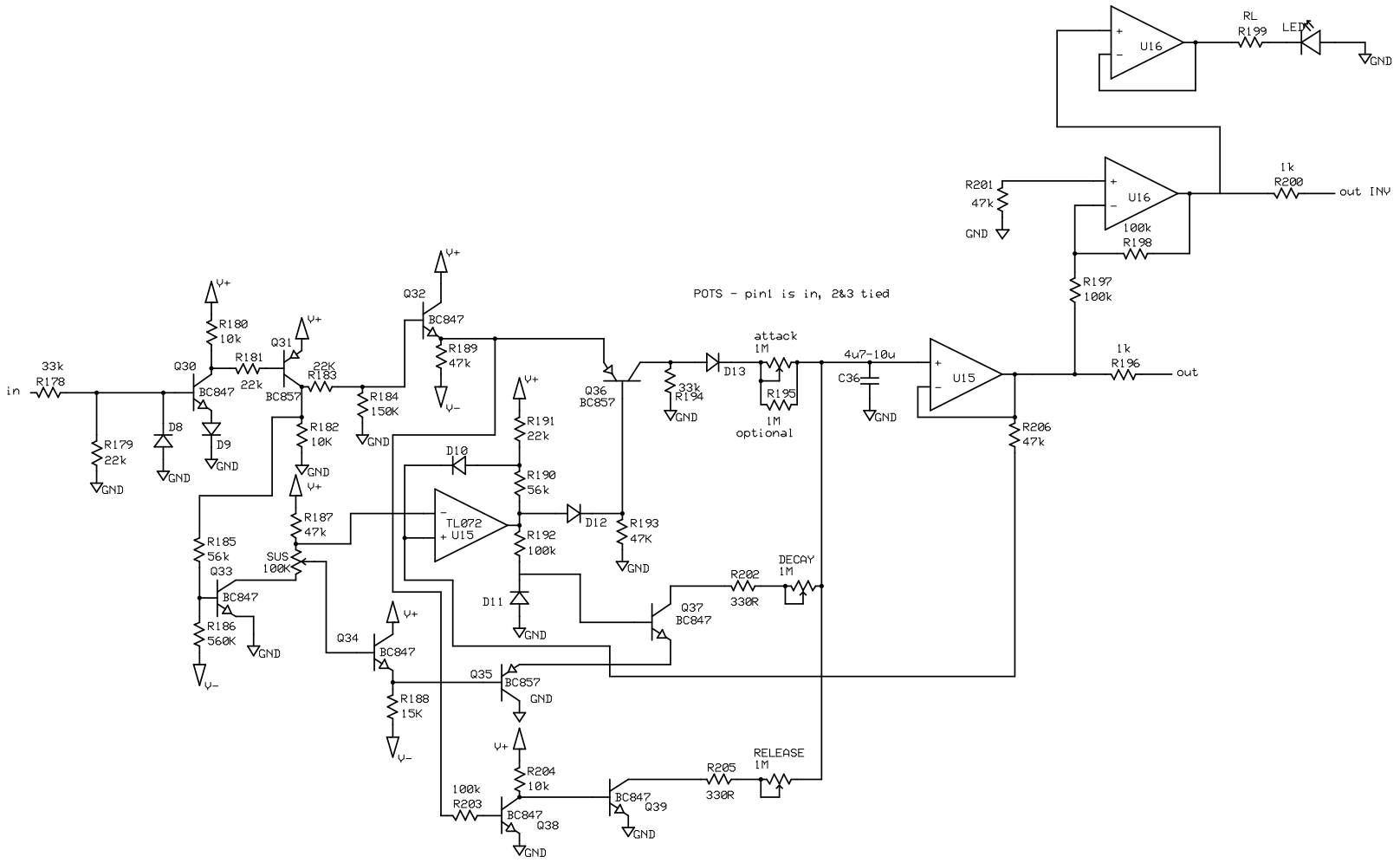

max R206
max C35, U15, Q39, D13

nlc		
adsr based on rol100m		
Designer's name	Rev 1.0 08-Dec-16	Page # or name

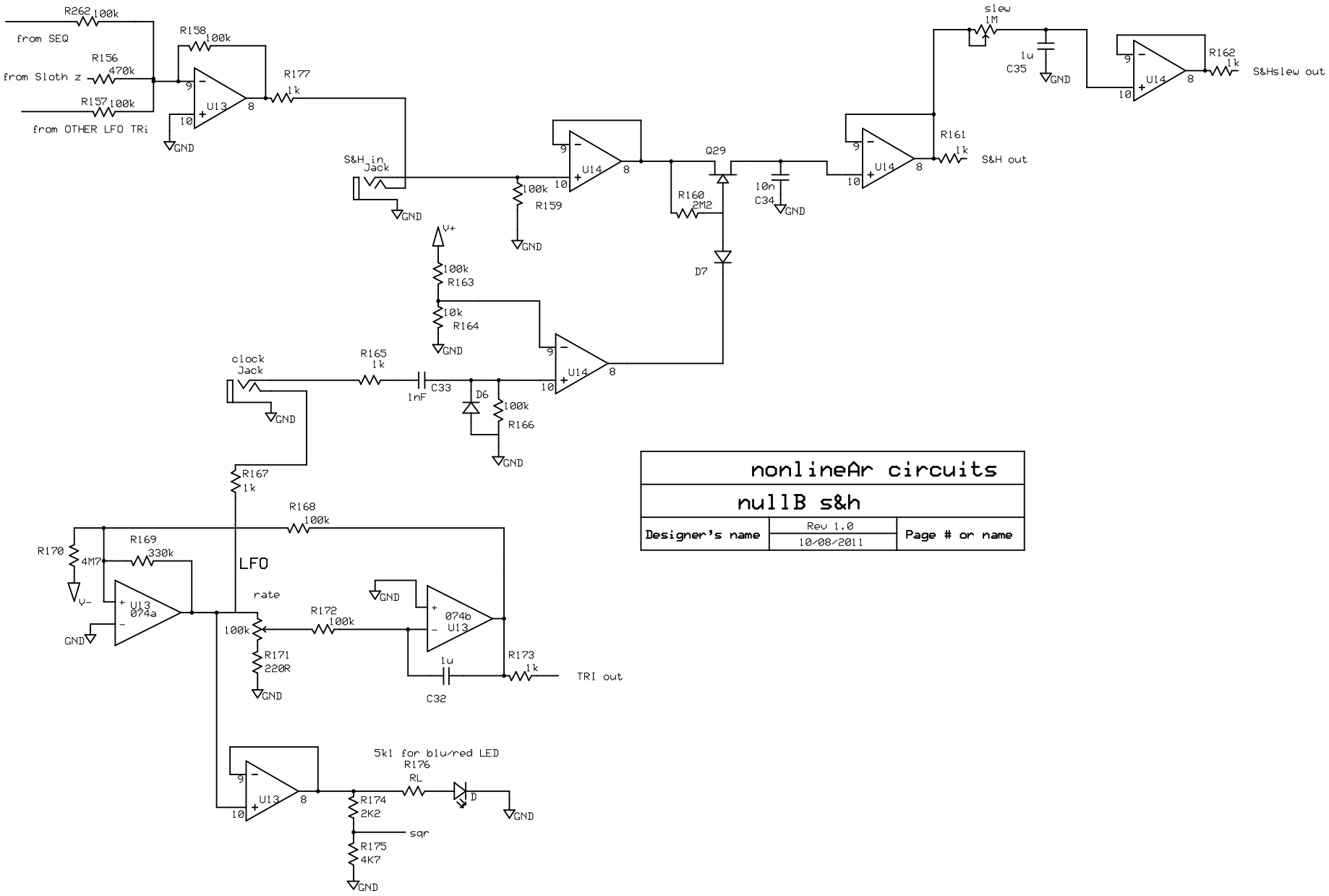

nonlineAr circuits		
nullB s&h		
Designer's name	Rev 1.0 10/08/2011	Page # or name

nlc	
4seq & lfo for nullA2	
andrewF	

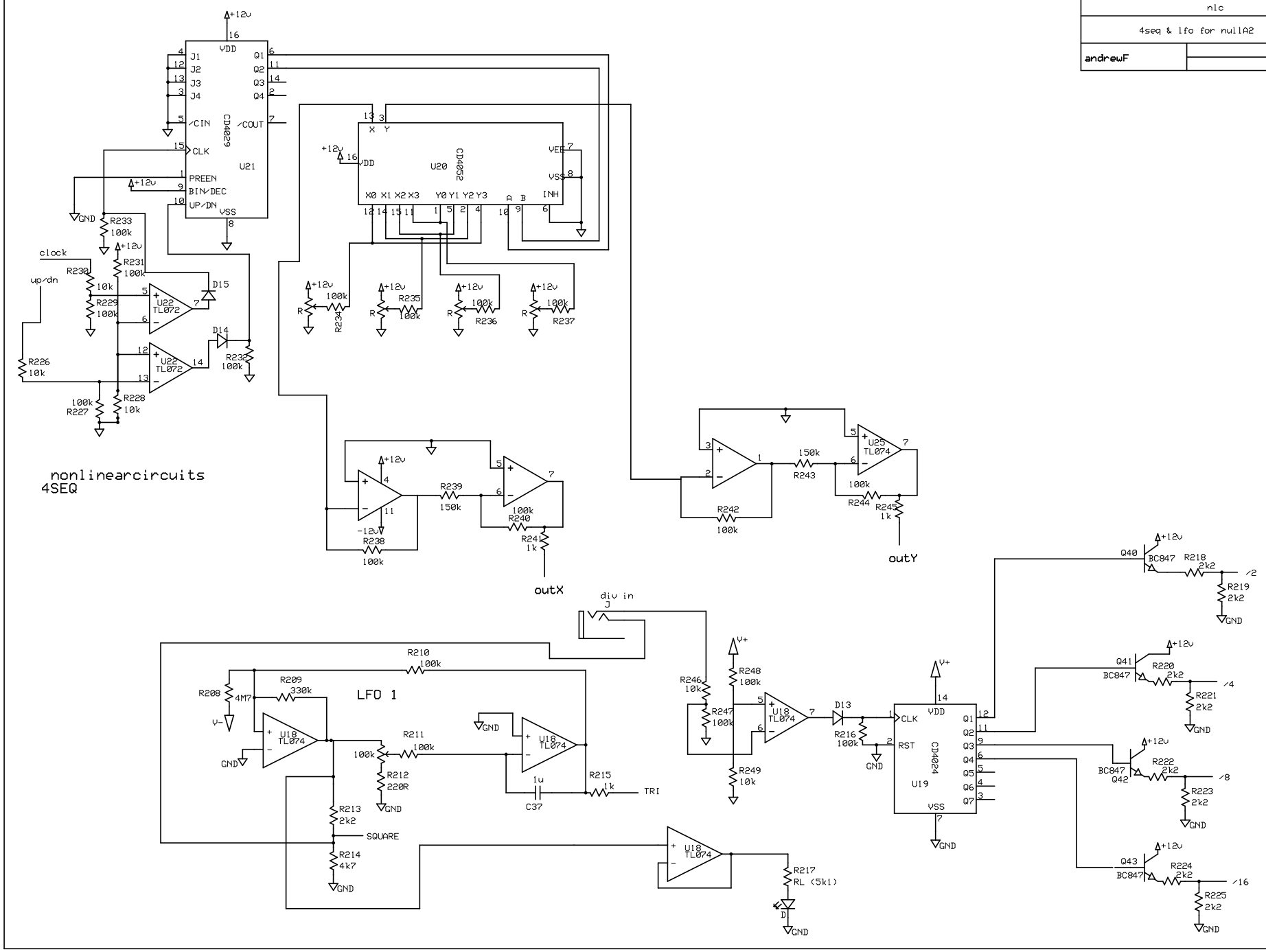

nlc		
sloth		
andrewf	Rev 1.0 14-Dec-16	Page # or name