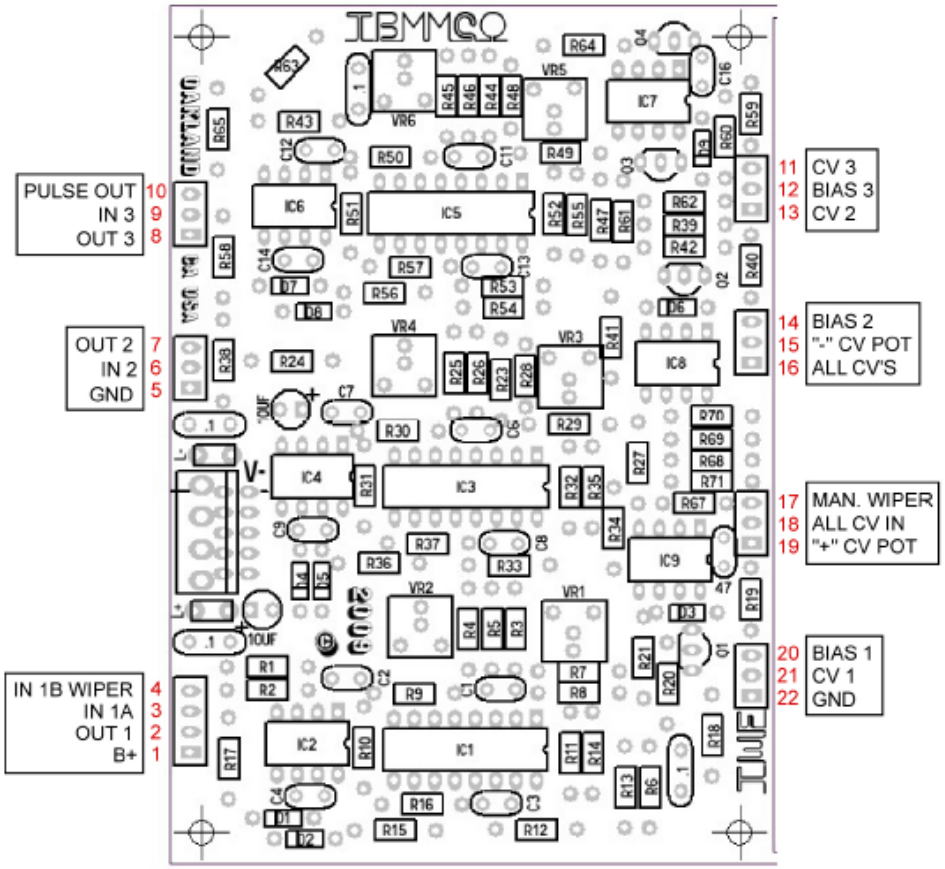
PULSE OUT 10
IN 3 9
OUT 3 8
OUT 2 7
IN 2 6
GND 5
IN 1B WIPER 4
IN 1A 3
OUT 1 2
B+ 1
11 CV 3
12 BIAS 3
13 CV 2
14 BIAS 2
15 "-" CV POT
16 ALL CV'S
17 MAN. WIPER
18 ALL CV IN
19 "+" CV POT
20 BIAS 1
21 CV 1
22 GND

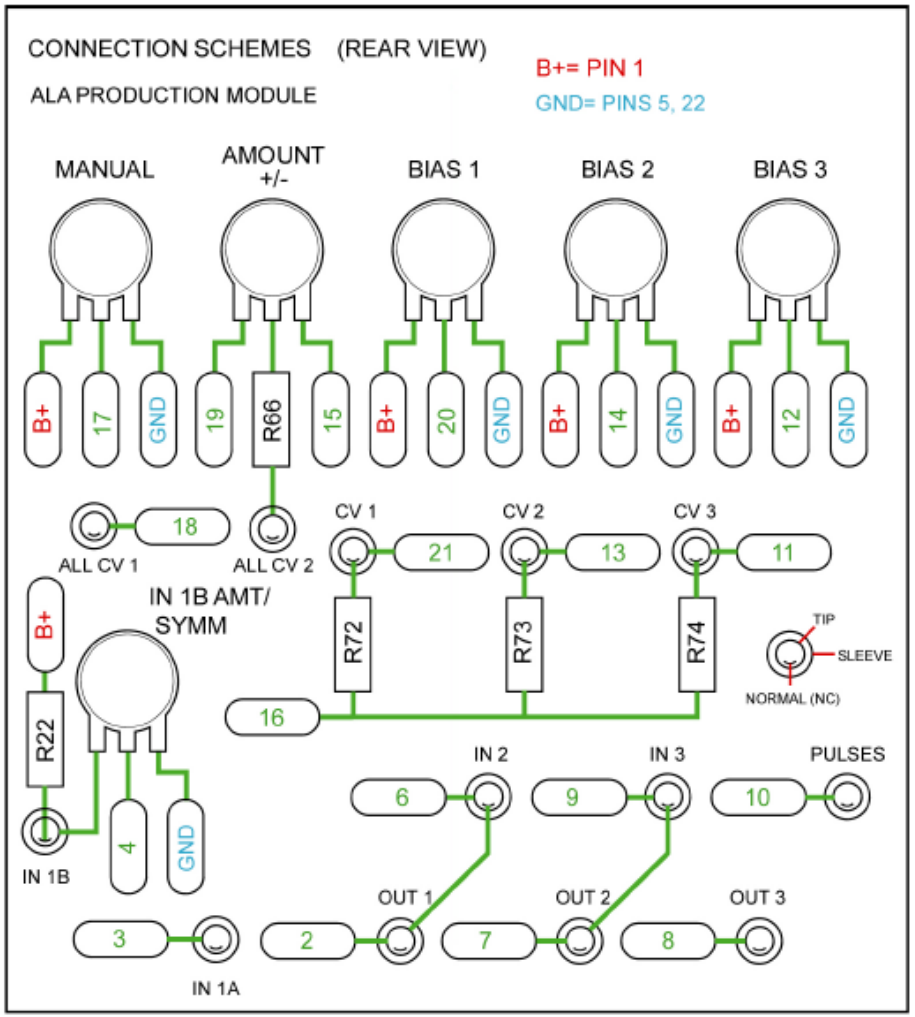
CONNECTION SCHEMES (REAR VIEW)
ALA PRODUCTION MODULE
B+= PIN 1
GND= PINS 5, 22
MANUAL
AMOUNT +/-
BIAS 1
BIAS 2
BIAS 3
B+ 17 GND 19 R66 15 B+ 20 GND B+ 14 GND B+ 12 GND
18
ALL CV 1
ALL CV 2
CV 1
CV 2
CV 3
21 13 11
IN 1B AMT/ SYMM
B+
R22
R72
R73
R74
TIP
SLEEVE
NORMAL (NC)
16
IN 2
IN 3
PULSES
6 9 10
IN 1B
4
GND
OUT 1
OUT 2
OUT 3
3 2 7 8
IN 1A