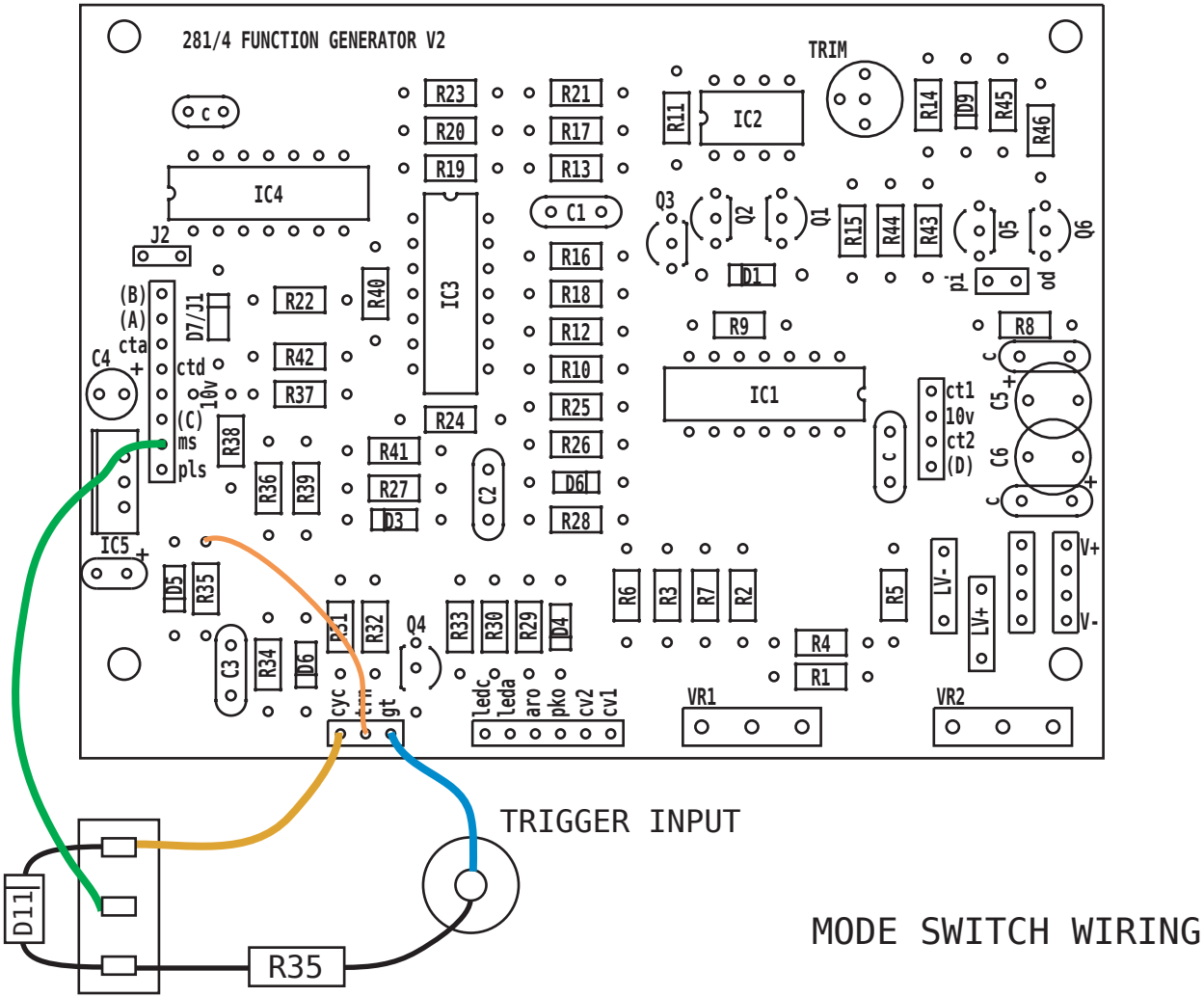


TRIGGER INPUT

MODE SWITCH WIRING

D11

R35

MODE SWITCH