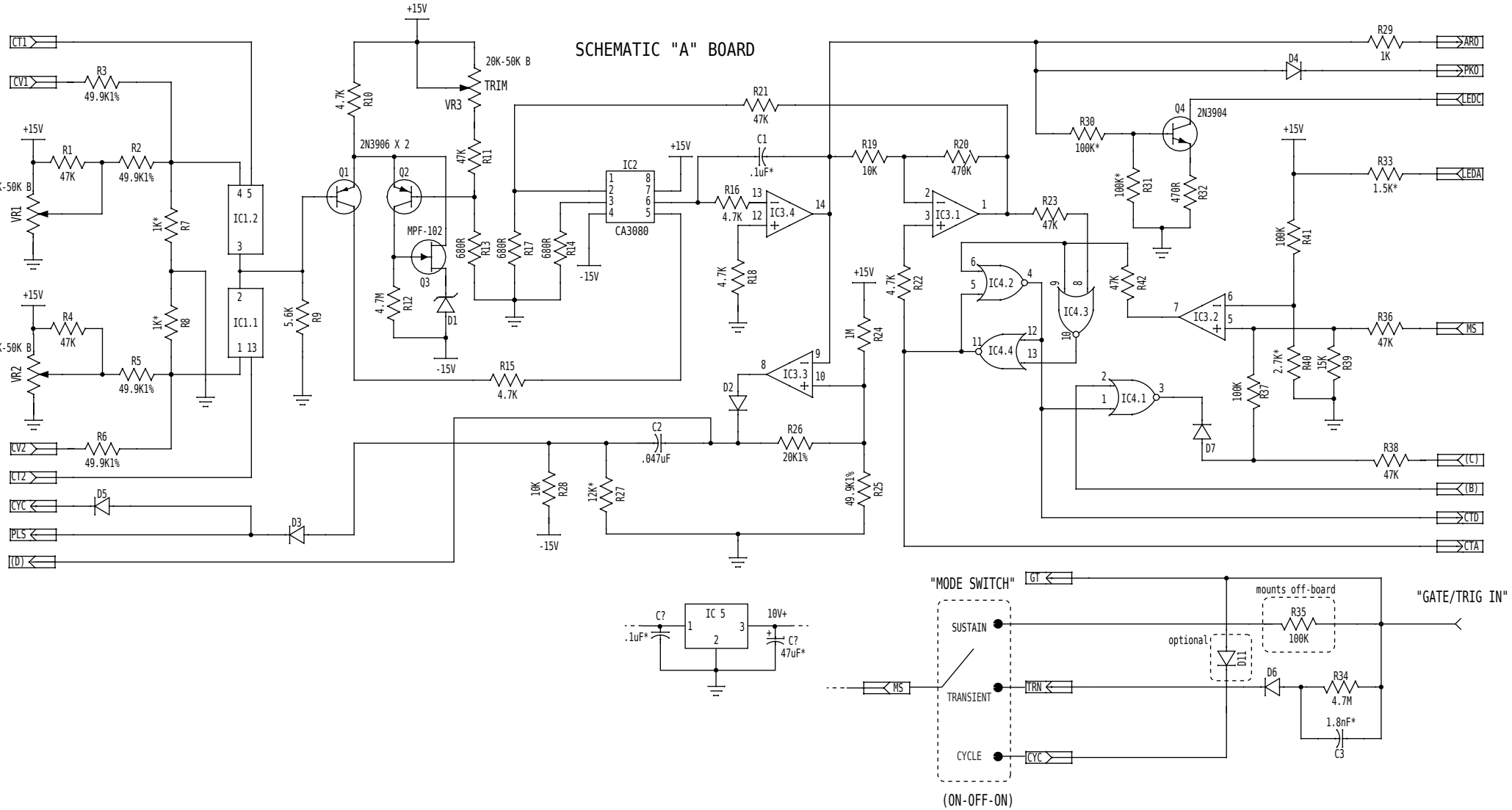
SCHEMATIC "A" BOARD
CT1
CV1
CV2
CT2
CYC
PLS
(D)
R3
49.9K1%
R1
47K
R2
49.9K1%
10K-50K B
VR1
R4
47K
R5
49.9K1%
10K-50K B
VR2
R6
49.9K1%
R7
1K*
R8
1K*
IC1.2
IC1.1
R9
5.6K
+15V
R10
4.7K
2N3906 X 2
Q1
Q2
MPF-102
Q3
R12
4.7M
D1
-15V
20K-50K B
TRIM
VR3
R11
47K
R13
680R
R17
680R
R14
680R
IC2
CA3080
R15
4.7K
R21
47K
C1
.1uF*
R16
4.7K
IC3.4
R18
4.7K
R19
10K
R20
470K
IC3.1
R22
4.7K
R23
47K
IC4.2
IC4.3
IC4.4
IC4.1
IC3.2
IC3.3
D2
R24
1M
R26
20K1%
R25
49.9K1%
C2
.047uF
R28
10K
R27
12K*
R29
1K
D4
R30
100K*
Q4
2N3904
R31
100K*
R32
470R
R33
1.5K*
R41
100K
R42
47K
R36
47K
R40
2.7K*
R39
15K
R37
100K
D7
R38
47K
ARO
PKO
LEDC
LEDA
MS
(C)
(B)
CTD
CTA
D5
D3
IC 5
C?
.1uF*
10V+
C?
47uF*
"MODE SWITCH"
SUSTAIN
TRANSIENT
CYCLE
(ON-OFF-ON)
GT
TRN
CYC
mounts off-board
R35
100K
optional
D11
D6
R34
4.7M
1.8nF*
C3
"GATE/TRIG IN"